4-Bar Rear Suspension Instructions

Coilover

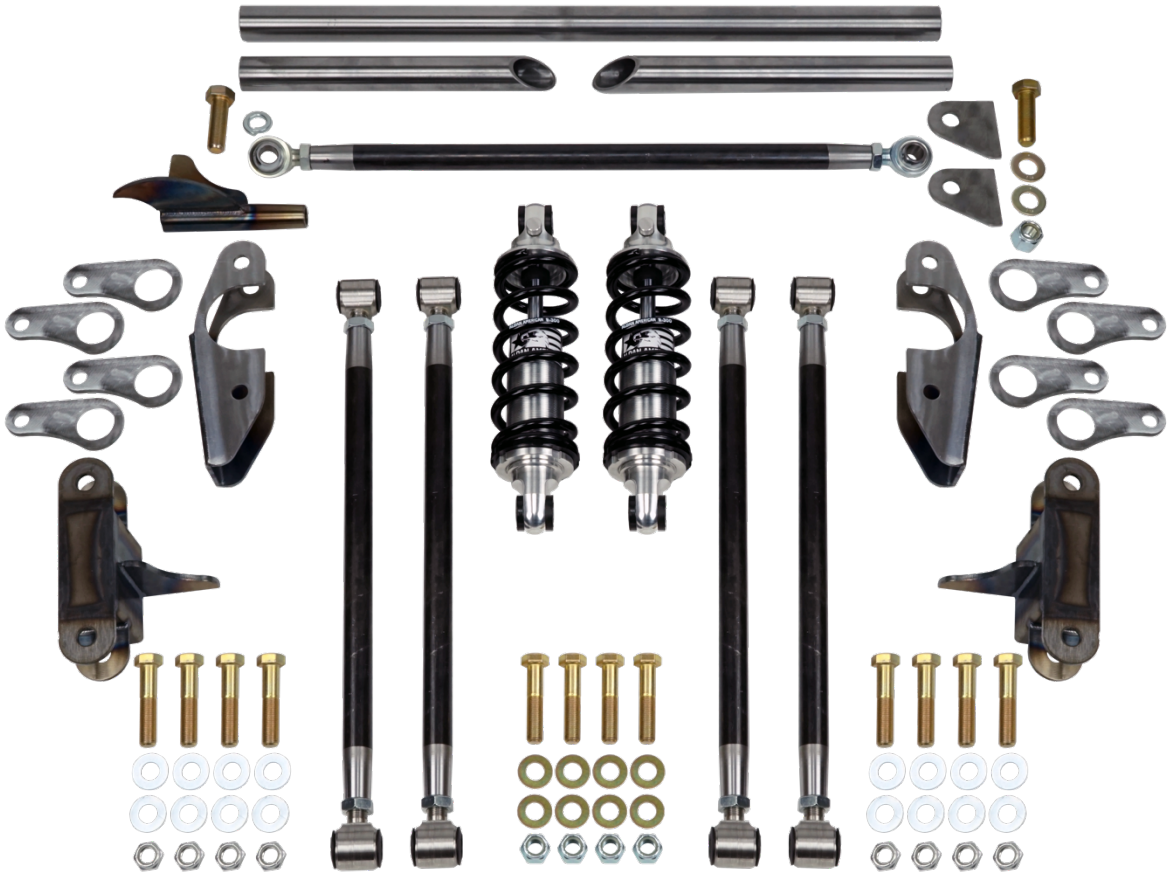

SCOTT'S HOTRODS 'N CUSTOMS 2212 MOHAWK AVE KNOXVILLE, TN 37915 865-951-2081 scotts@scottshotrods.com

Scott's Hotrods slightly different kits for different model vehicles. See the following examples:

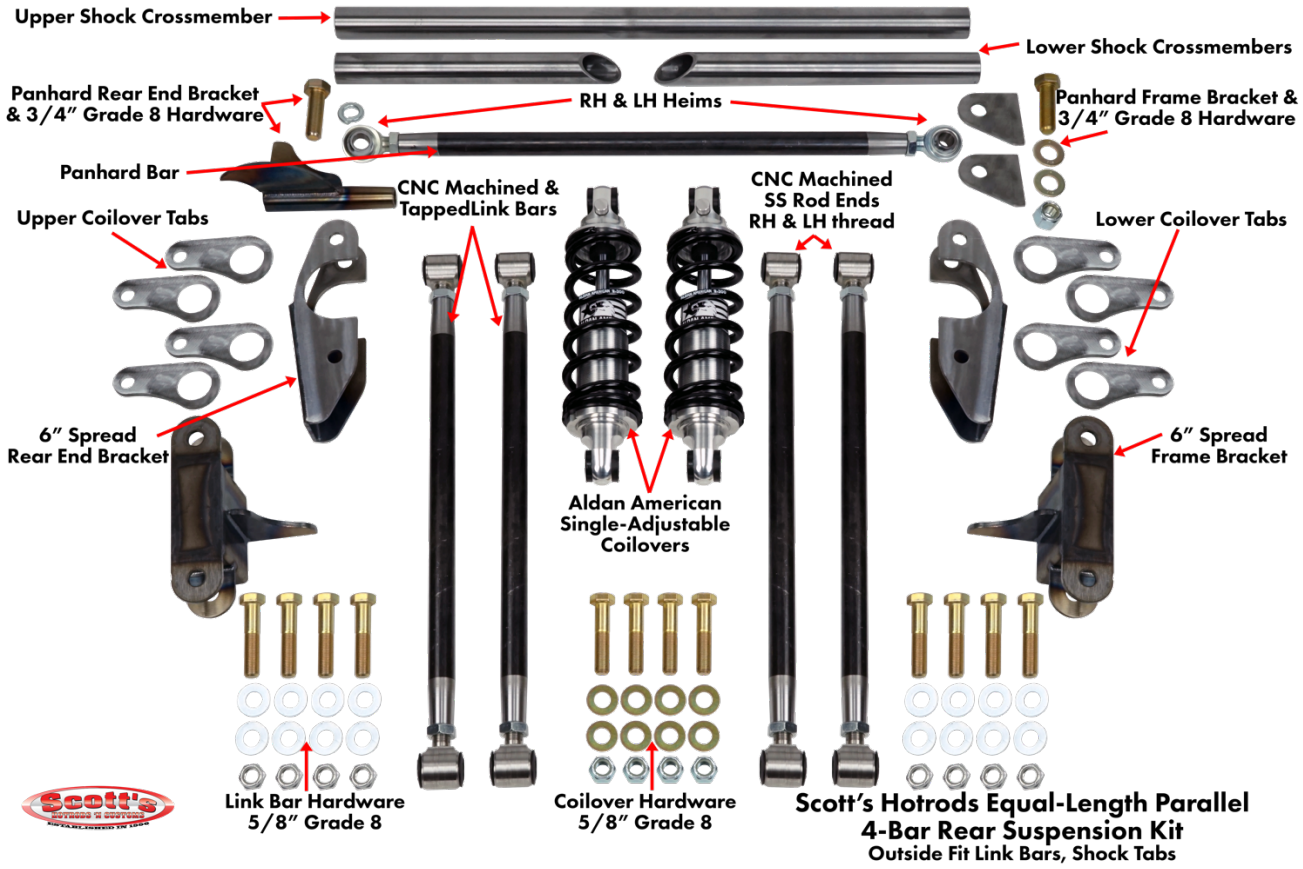

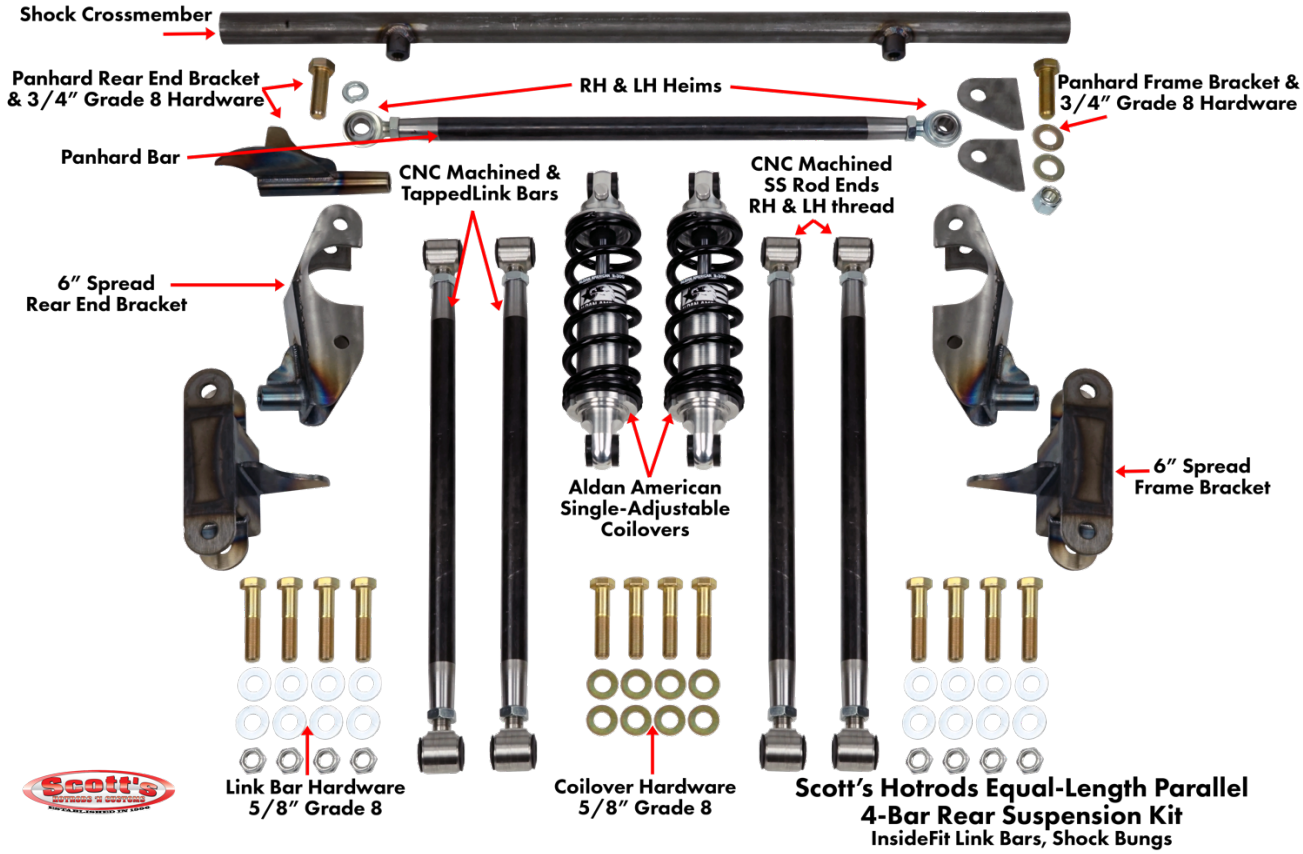

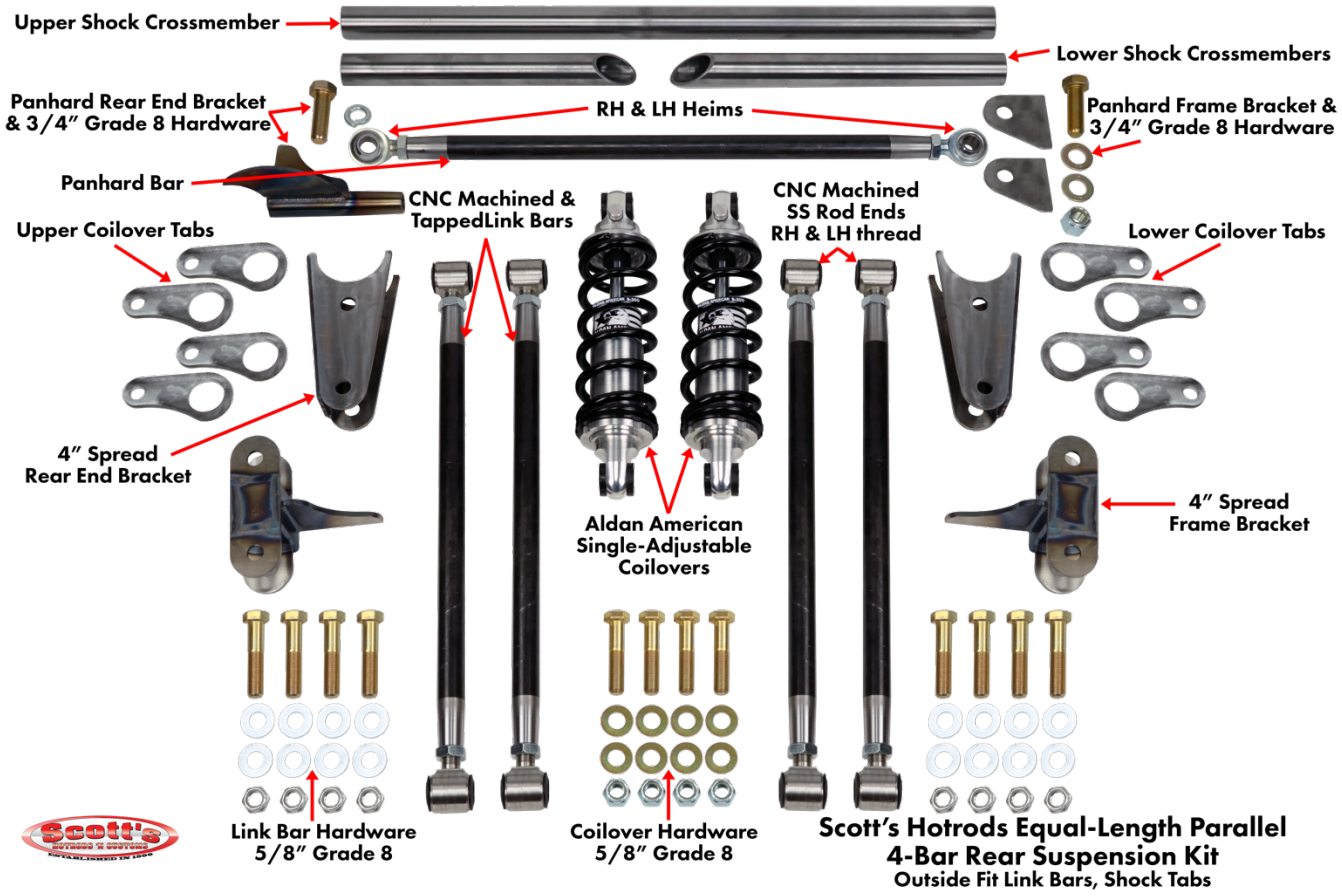

Scott's Hotrods Equal-Length Parallel 4-Bar Rear Suspension Kit
Outside Fit Link Bars, Shock Tabs

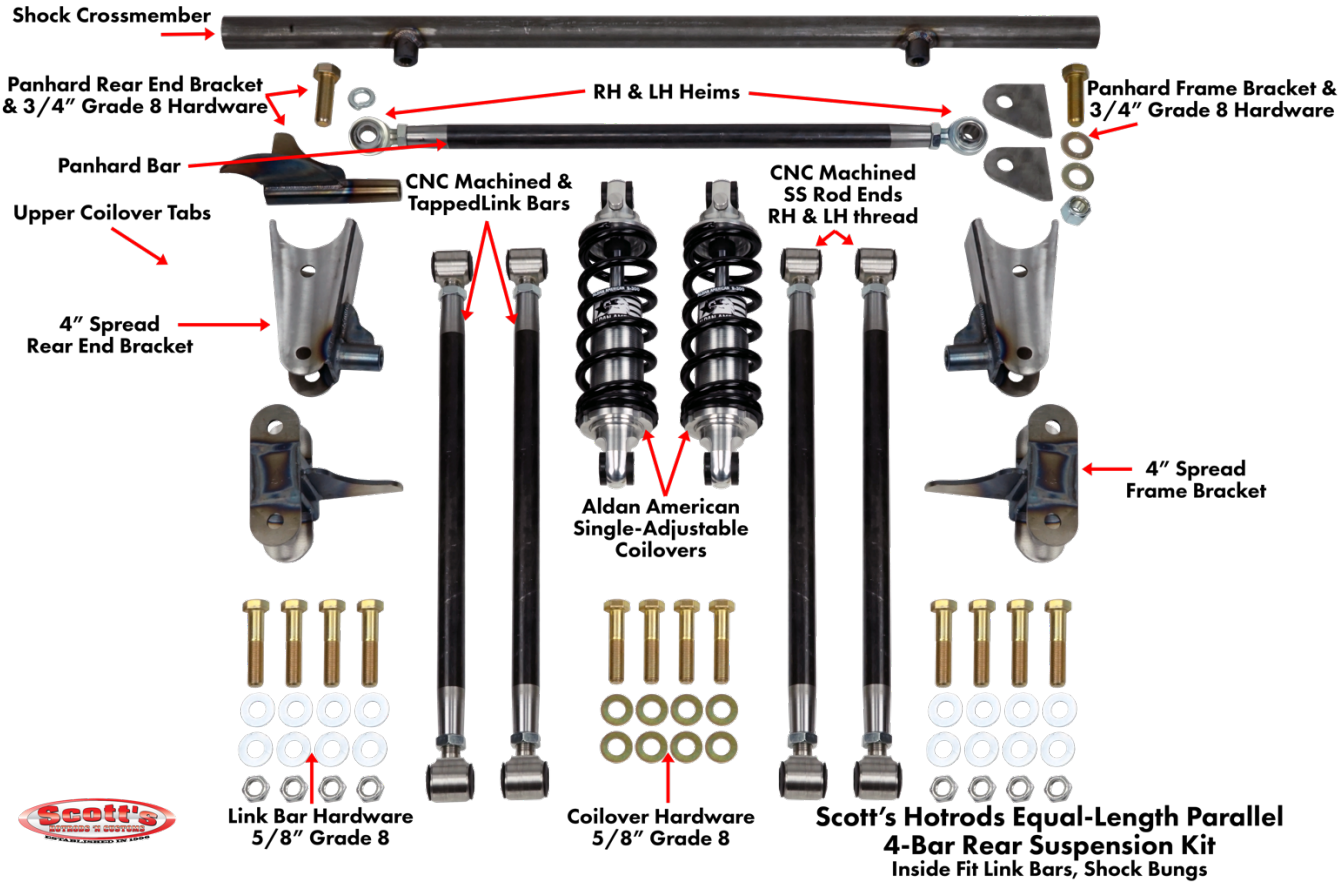

Scott's Hotrods Equal-Length Parallel 4-Bar Rear Suspension Kit
Inside Fit Link Bars, Shock Bungs

SCOTT'S HOTRODS 'N CUSTOMS 2212 MOHAWK AVE KNOXVILLE, TN 37915 865-951-2081 scotts@scottshotrods.com

Step 1: Mark your factory center line on the frame. This will be the centerline of your rear end.

The best way to do that is take a Plumb bob and hang it from the center line of your rear end down to the ground and mark it.

Check to make sure it is where you want it to be 100%. If you are satisfied with the centerline, mark both sides of the vehicles frame.

Step 2: Remove all of the stock rear suspension, all the brackets and make sure the axle tubes all cleaned and all brackets are removed 100%

Step 3: When you install the new 4-bar brackets on the rear end you want to make sure your pinion is at 3 degrees going up.

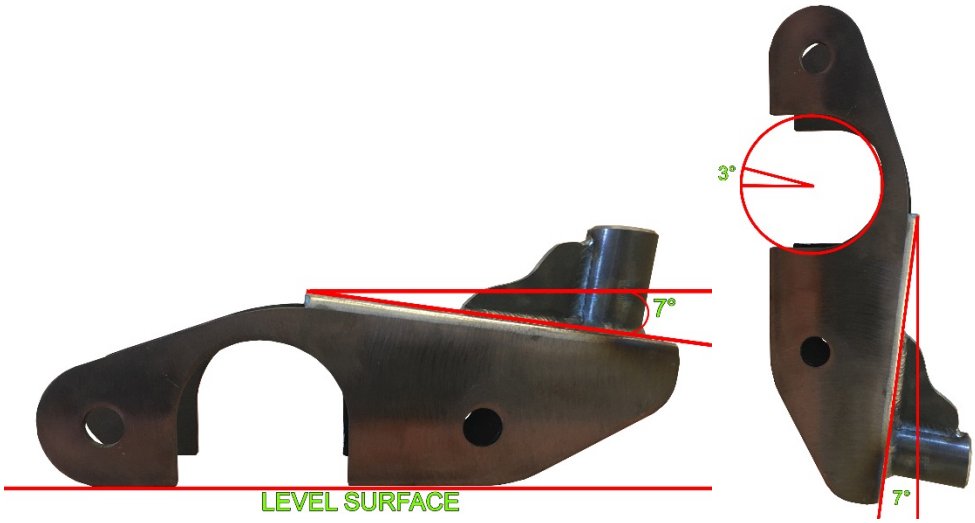

*6" Spread Brackets Shown. 4"Spread Brackets have both holes below the Axle Tube.

Step 4: With the brackets tacked on the axle tubes take the 4 link bars and install them on the brackets you tacked on the axle tubes with about 5-threads showing on the Rod Ends.

NOTE: Each bar is tapped with Right-Hand Thread (RHT) on one end and Left-Hand Thread (LHT) on the other. We recommend matching all the bars so that all the link bars on the Rear End side have the same pitch thread to avoid confusion later.

Step 5: Attached the Front Brackets to the other ends of the link bars with about 5-threads showing on the Rod Ends. With the Rear End at centerline, swing the front brackets up and mark will they will be welded to the frame.

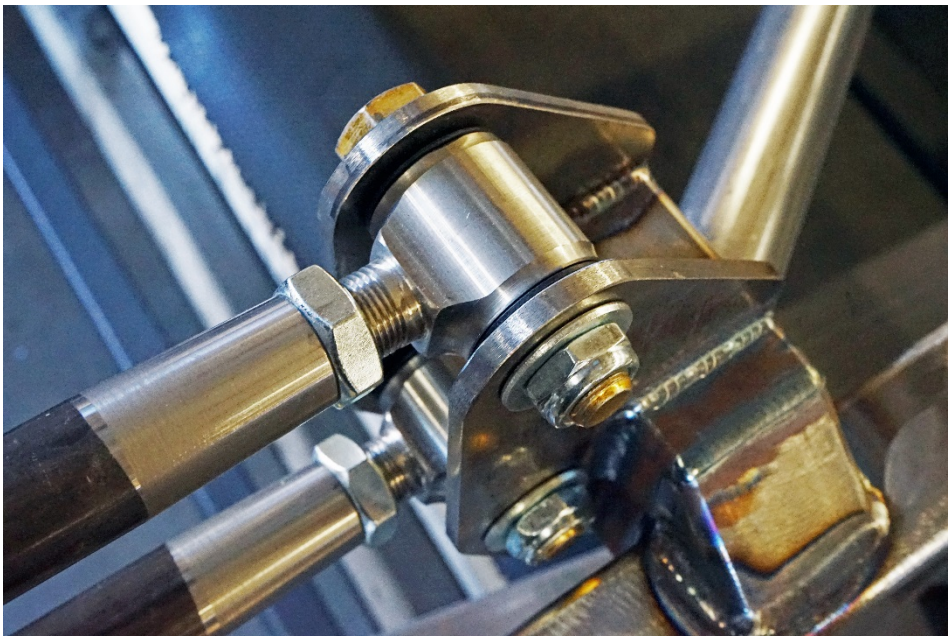

Step 6: Weld an 1/8-inch plate to box your frame on both the Drivers and Passengers Side of the frame where the Front Brackets will land.

Step 7: Swing your Front Brackets up and tack them in place on your freshly welded boxing plates.

NOTE: ***UNIBODY CARS*** It is recommended that you reinforce your vehicles subframe where the front brackets are to be installed. An extra plate on the inside or outside will help in high-horsepower and racing applications. You may also have to cut your floor to access the front brackets to weld them 360-degrees.

Step 8: Take the rear coil-overs and bolt them onto the rear end brackets that you have tacked in place in Step 3.

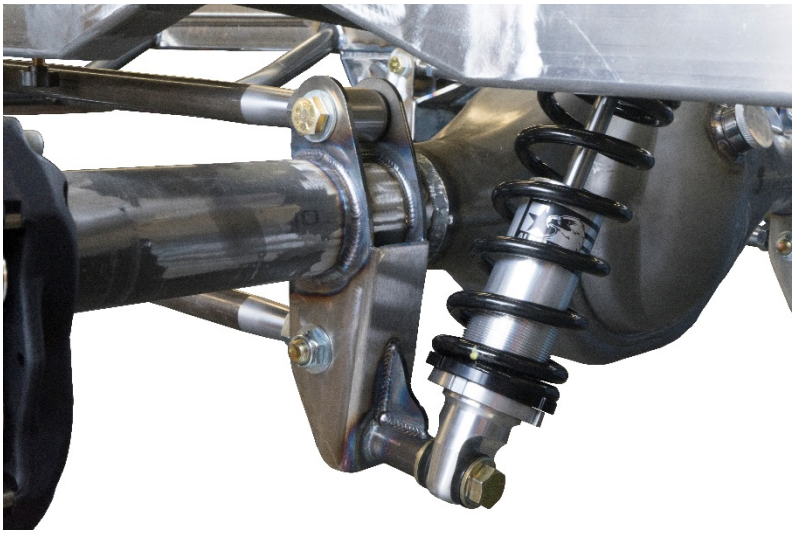

Step 9: Attach the Shock Crossmember to the top of the Coilovers and mark on the frame where it will land on both the Drivers and Passengers Side.

NOTE: Keep in mind this will also set your ride height on how high or low you want your vehicle to sit.

Step 10: Weld an 1/8-inch plate to box your frame on both the Drivers and Passengers Side of the frame where the Shock Crossmember will land. Also tack on the Panhard D-tabs onto the Drivers Side boxing plate towards the front of the vehicle.

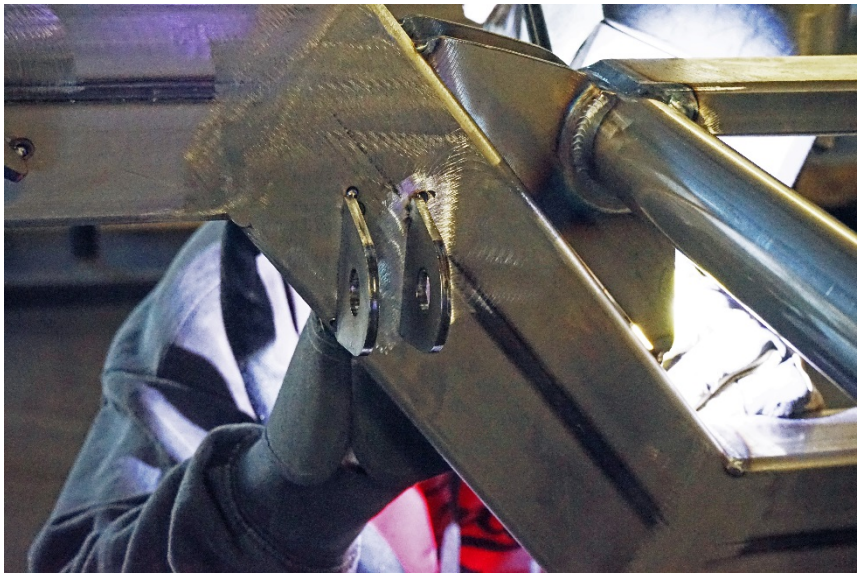

Step 11: Screw in the Heim Rod Ends into the Panhard bar and attached one end to the D-Tabs you just tacked in place. Now take the Panhard Bracket locate the bracket on the rear end.

NOTE: You want to have Panhard bar as level as possible at ride height

Step 12: Double Check that everything lines up and is in the correct location. Then you can weld it all up 100%

Torque Specs

Rod End Bolts - 50-55 ft/lbs

Coilover Bolts - 50-55 ft/lbs

Panhard Bolts - 50-55 ft/lbs

If you have any questions while installing your new Scott's Hotrods 4-Bar Rear Suspension, give us a call at 805-485-0382 M-F 8am-5pm Pacific Time.

The following images show some different configurations of our Equal Length Parallel 4-Bar Kits for reference.

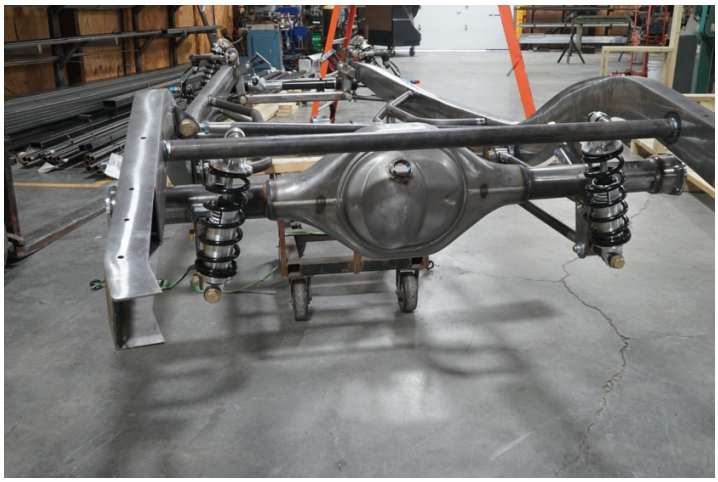

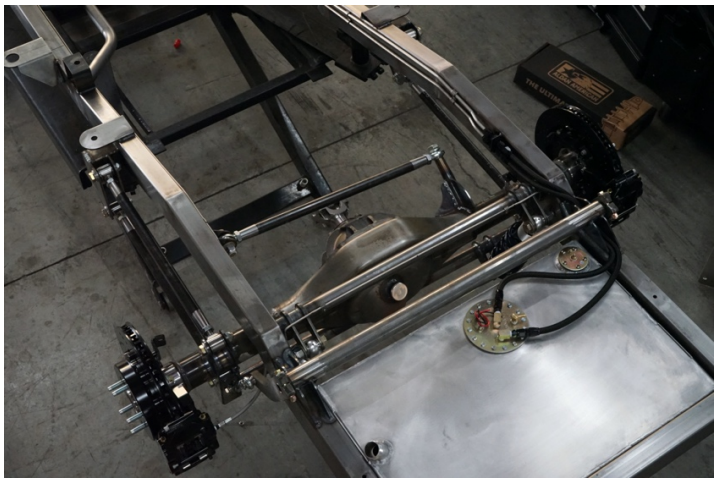

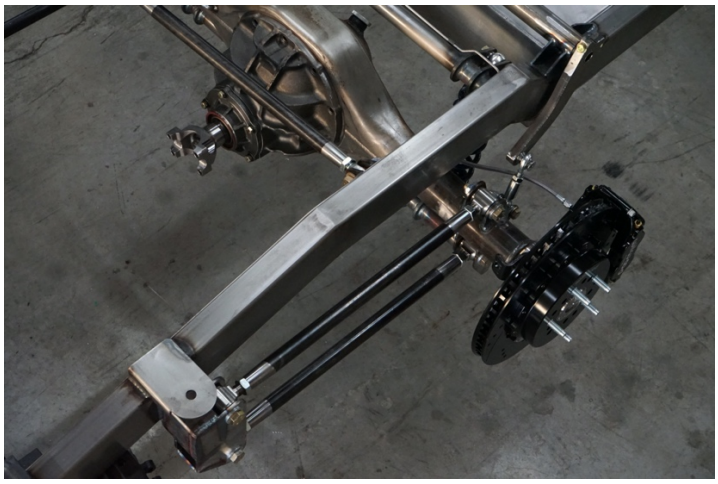

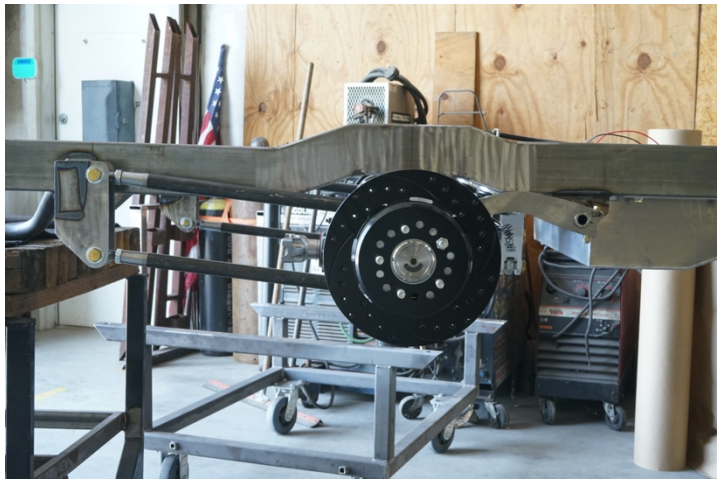

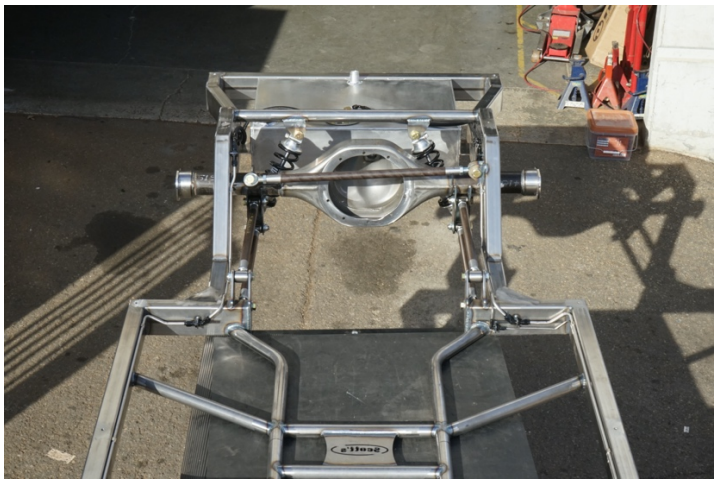

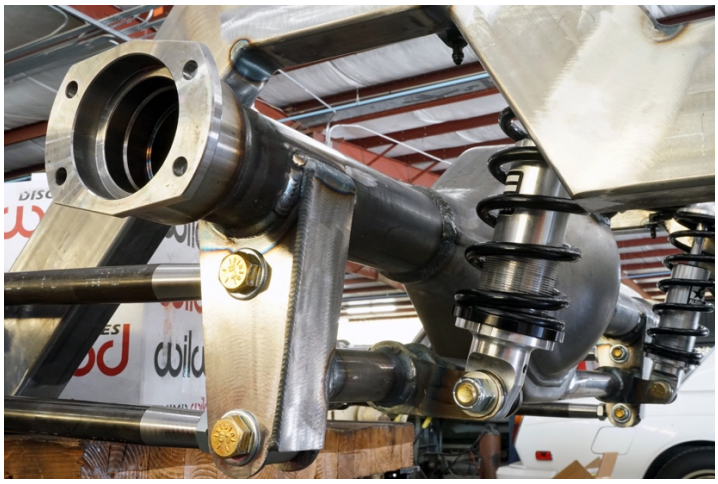

SCOTT'S HOTRODS 'N CUSTOMS 2212 MOHAWK AVE KNOXVILLE, TN 37915 865-951-2081 scotts@scottshotrods.com

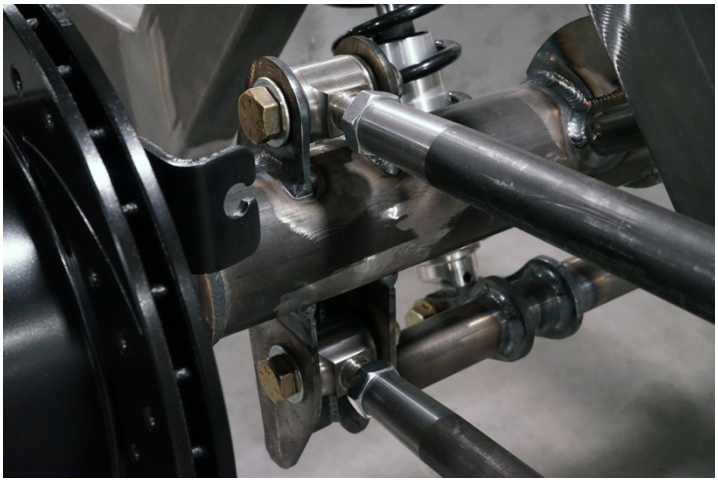

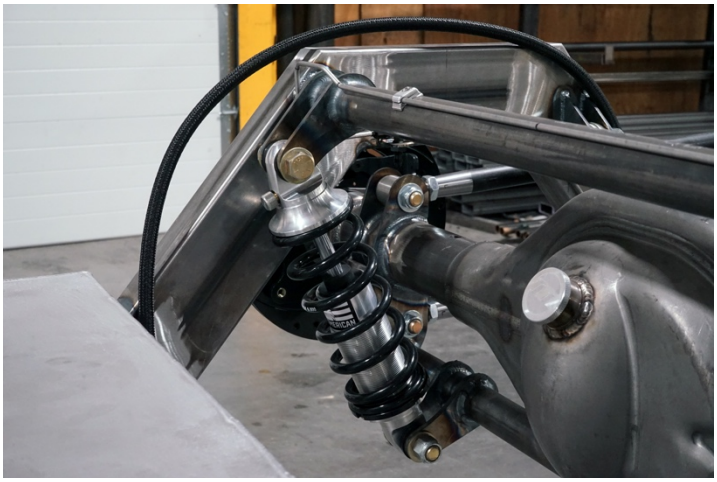

SCOTT'S HOTRODS 'N CUSTOMS 2212 MOHAWK AVE KNOXVILLE, TN 37915 865-951-2081 scotts@scottshotrods.com